ASSEMBLY & INSTALLATION INSTRUCTION

2306-3 , 2306-4

Please read carefully and save these instructions, as you may need them at a later date.

CAUTION

Turn off the main power at the circuit breaker before installing the fixture, in order to prevent possible shock.

GENERAL

All electrical connections must be in accordance with local and National Electrical Code (N.E.C.) standards. If you are unfamiliar with proper electrical wiring connections obtain the services of a qualified electrician.

Remove the fixture and the mounting package from the box and make sure that no parts are missing by referencing the illustrations on the installation instructions.

ASSEMBLY AND INSTALLATION

1. Screw the THREADED NIPPLE(5) into the SINGLE BAR (2) and put the HEX NUTS (4) onto the THREADED NIPPLE (5), as shown. Secure the position of the THREADED NIPPLE (5) by tightening the HEX NUTS (4) against the SINGLE BAR (2).

2. Carefully pass the power supply (9&11) wires and the SUPPLY GROUND WIRE (6) by the SINGLE BAR (2). Secure the SINGLE BAR (2) to the OUTLET BOX (1) with MOUNTING SCREWS (3).

3. Attach the BLACK SUPPLY WIRE (11) to the SMOOTH (or BLACK) FIXTURE LEAD WIRE (12) by using the WIRE CONNECTOR (8). At the same manner, attach the WHITE SUPPLY WIRE (9) to the RIBBED (or WHITE) FIXTURE LEAD WIRE (10). Loop the FIXTURE GROUND WIRE (7) around the GROUND SCREW (14) of the SINGLE BAR (2). (Note: Be sure to provide an extra 3″ length of the FIXTURE GROUND WIRE (7) for connection to the SUPPLY GROUND WIRE (6).) Tighten the GROUND SCREW (14). Connect the remaining FIXTURE GROUND WIRE (7) to the SUPPLY GROUND WIRE (6) using a WIRE CONNECTOR (8). Place wiring and connections inside the OUTLET BOX (1).

4. Place the CANOPY (13) onto the THREADED NIPPLE (5), and secure it into place using the CAP FINIAL(15) provided.

5. Slide the SHADE over the SOCKET, secure with and SOCKET RING (16)

6. Screw light bulb into the socket and make sure it does not exceed the maximum wattage specified on the fixture's wattage rating label

INSTALLATION IS NOW COMPLETED

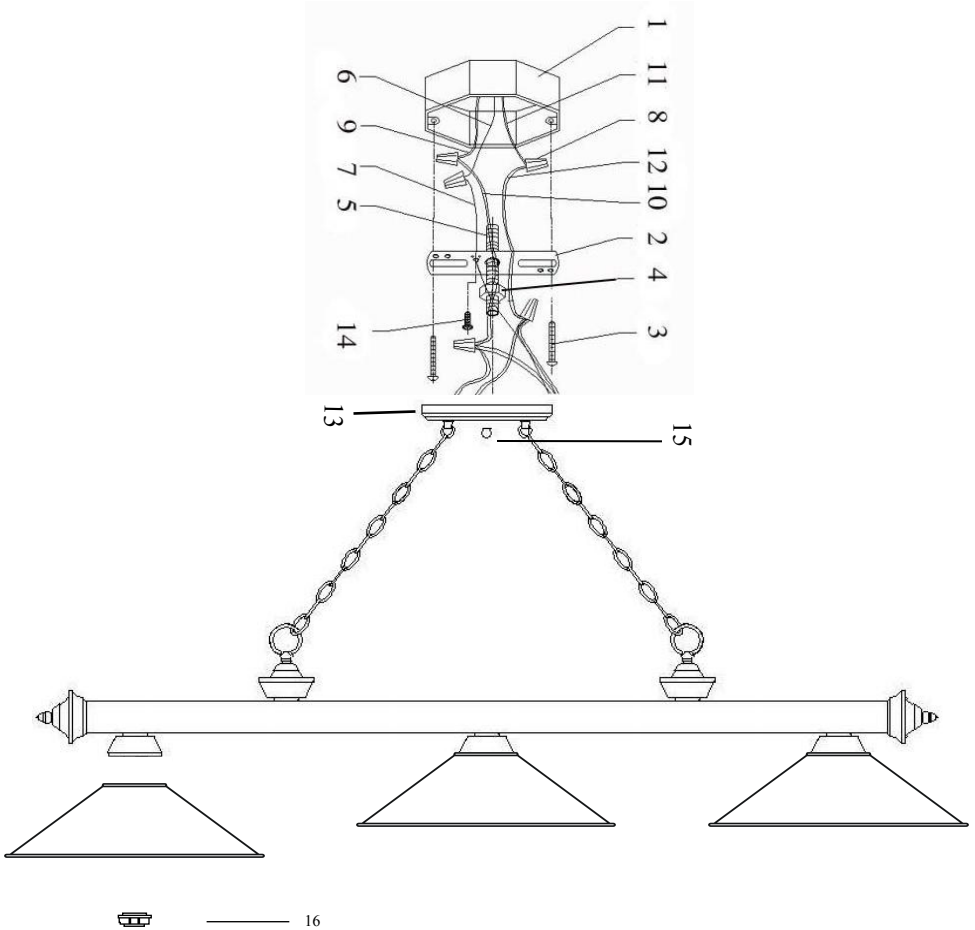

1. OUTLET BOX
2. SINGLE BAR
3. MOUNTING SCREW
4. HEX NUT
5. THREADED NIPPLE
6. SUPPLY GROUND WIRE
7. FIXTURE GROUND WIRE
8. WIRE CONNECTOR
9. WHITE SUPPLY WIRE
10. RIBBED (OR WHITE) FIXTURE LEAD WIRE
11. BLACK SUPPLY WIRE
12. SMOOTH (OR BLACK)FIXTURE LEAD WIRE
13. CANOPY
14. GROUND SCREW
15. CAP FINIAL
16. SOCKET RING