TEAR SHEET

Overture XL Ring Chandelier

Item # PB 5031BZ-CG

Designer: Peter Bristol

O/A Height: 75.25"
Fixture Height: 30.75"
Min. Custom Height: 17.25"
Width: 39"
Canopy: 6" Round
Finishes: BZ, NB, PN
Glass Options: CG
Socket: Dedicated LED
Wattage: 42w (3100lm)
Note: UL Only | Custom Height Available | Fixture Can be Installed Inverted

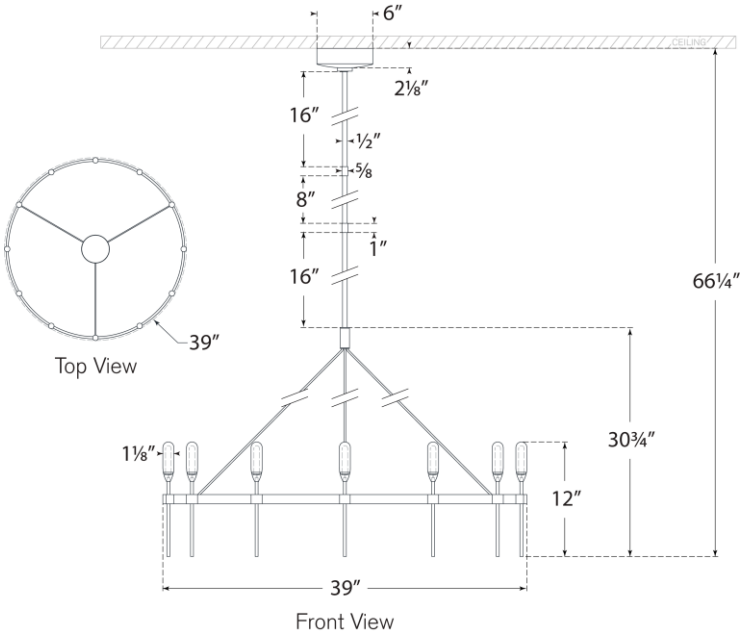

VISUAL COMFORT