TEAR SHEET

Darlana Medium Linear Lantern

Item # CHC 2156AI

Designer: Chapman & Myers

Height: 20.25"
Width: 41"
Extension: 13"
Canopy: 4.5" x 20" Rectangle
Finishes: AI, GI, PN
Socket: 5 - E12 Candelabra
Wattage: 5 - 60 C11
Weight: 19 Pounds
©EFC DESIGNS

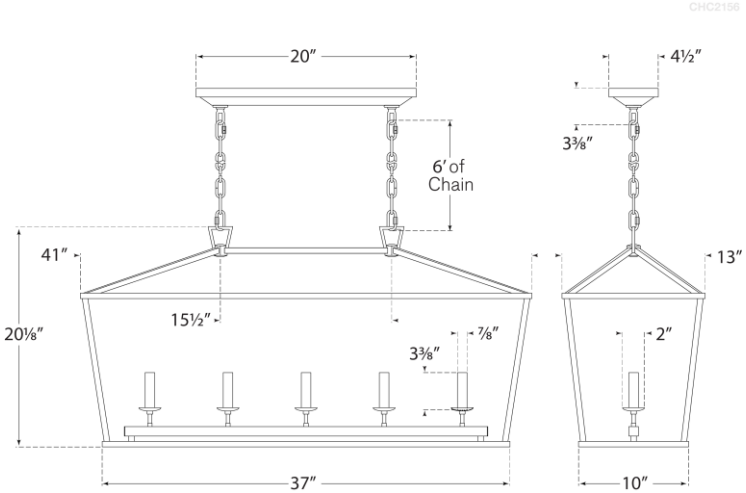

VISUAL COMFORT