M15202
INSTALLATION INSTRUCTIONS SHEET

START FROM HERE

- Make sure power is completely off at the fuse box.
- Have your fixture installed by a qualified licensed electrician
- Prepare everything in clear area.
- Wear gloves at all times during this installation.
- Read instructions carefully before you start assembly.
- Keep this instruction sheet for future reference.

Technical Support:1-844-628-8368

Please Note:

- All Matteo Lighting fixtures come with pre-wired module(s).
- Unless instructed to do so, please do not touch any part of the module(s) as any unnecessary contact with the module could cause permanent damage.

THIS LUMINAIRE MUST BE MOUNTED OR SUPPORTED IN A JUNCTION BOX

CE LUMINAIRE DOIT ÊTRE MONTÉ OU SUPPORTÉ DANS UNE BOÎTE DE JONCTION

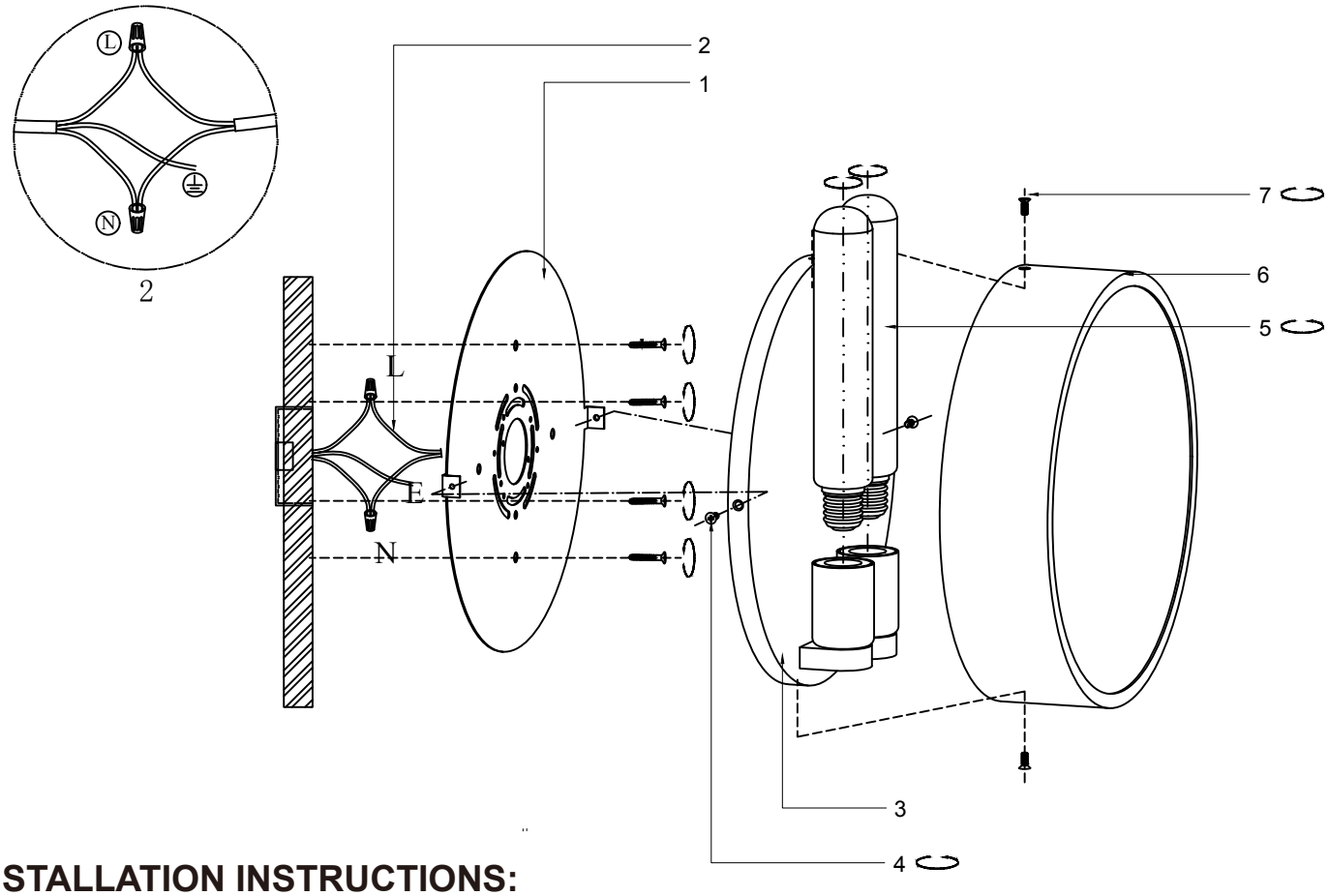

INSTALLATION INSTRUCTIONS:

- Ensure main supply is switched off.
- Take the round ring out from carton and ensure it's in good condition.
- Put the mounting bracket(1) on the junction box.
- Use nuts to connect the bracket(1) onto the mounting surface.
- Use screw to fix the bracket.
- Ensure the main supply is switched off,then connect wires according to color (White to White, Black to Black).(2) Connect all earth lug together onto the crossbar with green screw to tight.
- Put the canopy(3) on the bracket.
- Use screws(4) to fix the canopy.
  Install the lamp(5).
- Use screw(7) to fix shade(6) onto the light body.
- Reconnect power.

WARNING:

- This fitting must be earthed.
- Disconnect power and allow fitting to cool down before cleaning or changing the lamp.

www.matteolighting.com
Toll Free. 1.844.628.8368 E. info@matteolighting.com