LACAVA

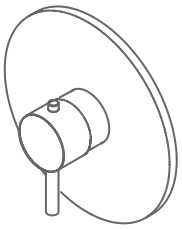

CIGNO
built-in thermostatic valve
15TH0.L.R

Specifications:

Installation:	built-in wall mount
Exterior Dimensions:	Ø 7 1/4”
Material:	solid brass construction with thermostatic cartridge
Water use:	10 GPM (43.5 PSI)
Finishes:	CR - polished chrome PN - polished nickel NI - brushed nickel BG - brushed gold 44 - matte black
Fittings included:	Rough-in # VTH0 and trim # 15TH0.L.R-A

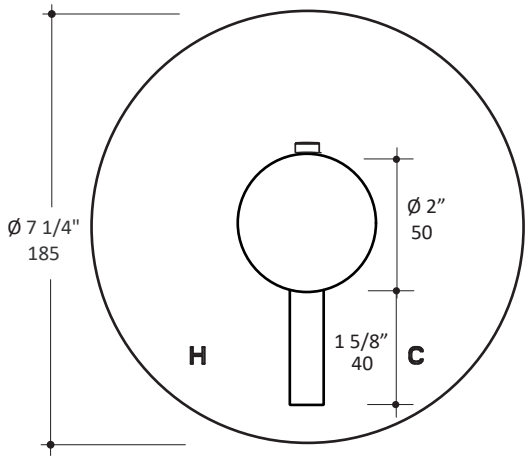

Features:

- thermostatic valve
- round backplate
- lever handle
- 3/4” NPT water IN and OUT connections
- anti-scald protection & temperature regulation
- water temperature set to 100°F
- screwdriver service stops
- finished wall must be flush with mudguard as marked
- 1” extension kit available

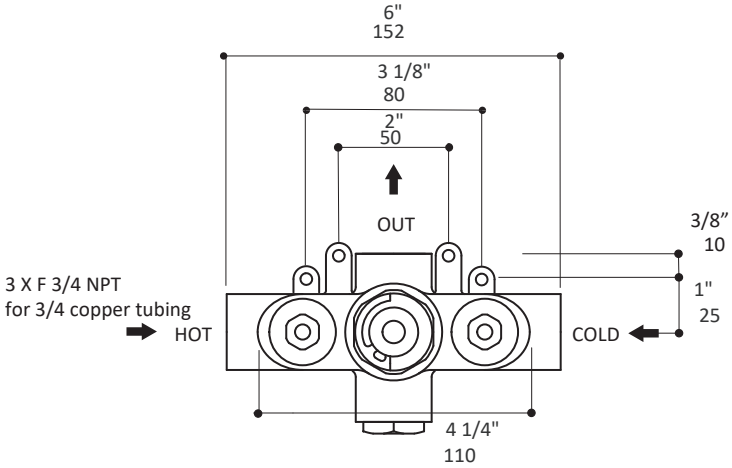

Codes + Standards:

- Meets and exceeds applicable national codes and standards
- CAL-Green compliant

ADA compliant when installed to specific requirements of this regulation

Recommended Items:

- Replacement parts:
  - VTH0 rough-in
  - 15TH0.L.R-A trim
  - VTH0-CT ceramic cartridge
  - VTH0-EX 1” extension kit

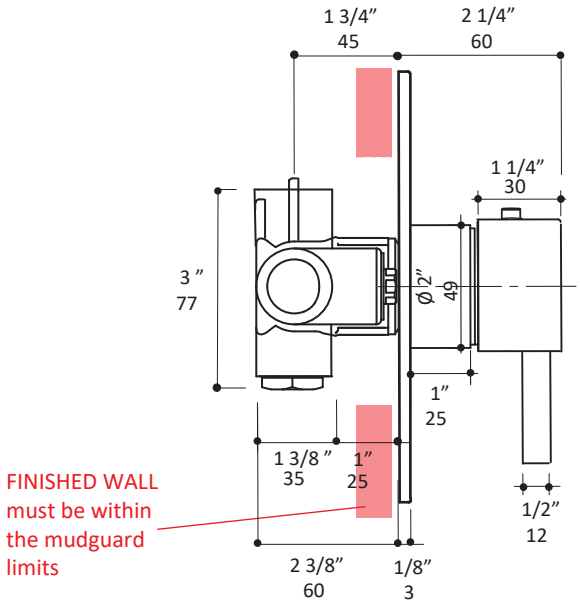

LACAVA reserves the right to revise any dimension or information on this sheet without notice. Dimensions are nominal and may vary within an industry accepted tolerance of 1/4”. Drawings provided herein are meant to give the user an idea of the product and are not made to scale. Location of plumbing is meant for reference, your specific application may vary.

Revised: 03/06/2020