JAMES MARTIN VANITIES™

650-V46 **Vanity**
Top Assembly Instructions

James Matin Vanities Company always recommends you consult and/or hire a professional contractor when installing your vanity cabinet and top.

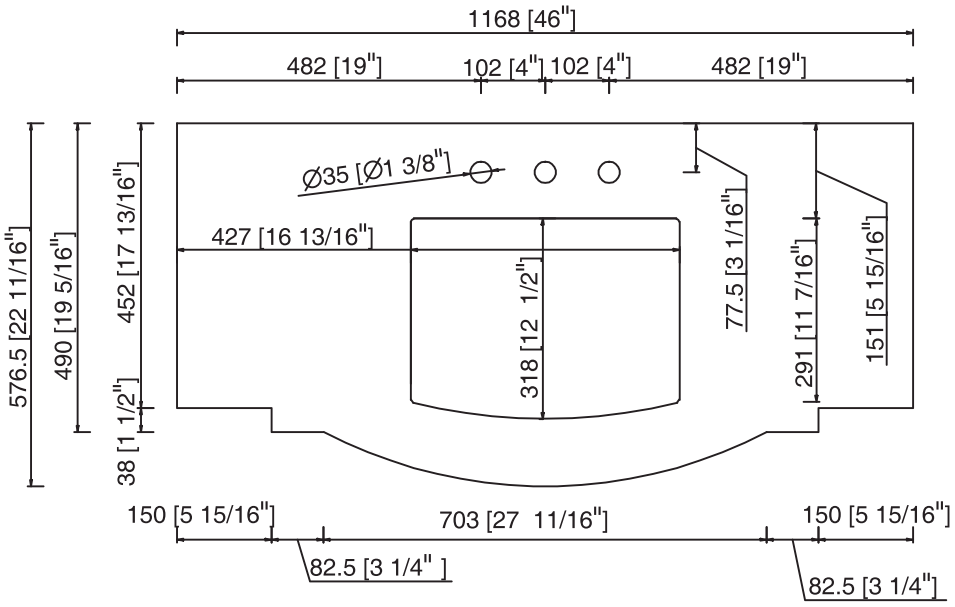

James Martin-Stone Top Measurement Specifications

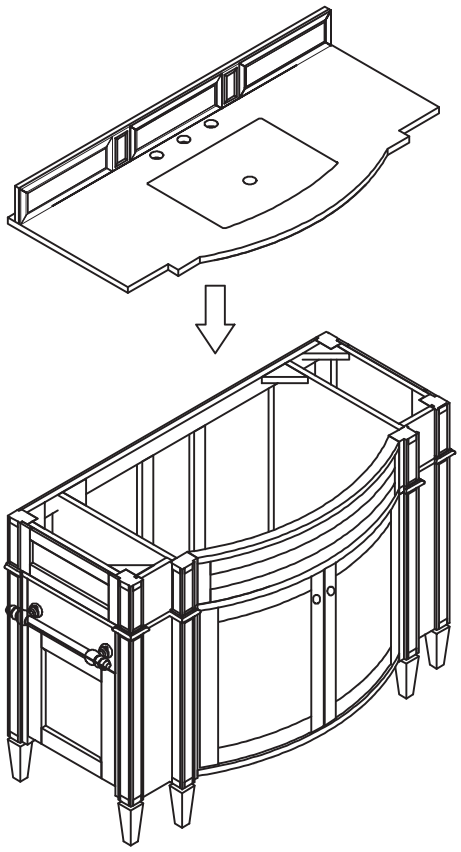

3cm /1.18"
Countertop

Please consult your professional contractor regarding the best Polyurethane Construction Adgesive to attach the Stone Top to the vanity cabinet-and backsplash, if desired.

Please Note： The vanity cabinet´s back panel is shipped un-cut, to allow for a variety of plumbing installation options.

Version:202003
Made in Vietnam