AXOR hansgrohe

Vernis Blend
Shower holder set 100 Vario 1.5 GPM
Surface: **brushed nickel** Part no. : **04951820**

Description

Features

- Consists of: Handshower, Handshower hose, Porter unit
- Integrated support function
- Spray modes: Rain, IntenseRain
- Flow: 1.5 GPM (5.7 L/Min)
- Pivot connector prevents hose from tangling
- 26° adjustment
- Wall supports made of plastic
- Rinseable screen seal

Technology

Quick Clean | EcoRight | XXL Performance

Compliance

WaterSense Meets EPA Criteria Certified by IAPMO R&T | UPC C ®

Product image

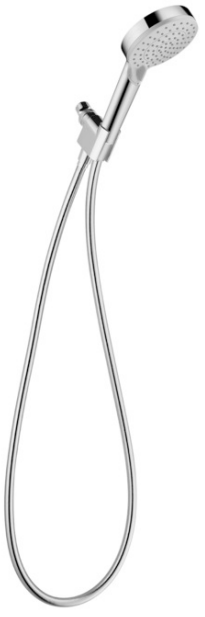
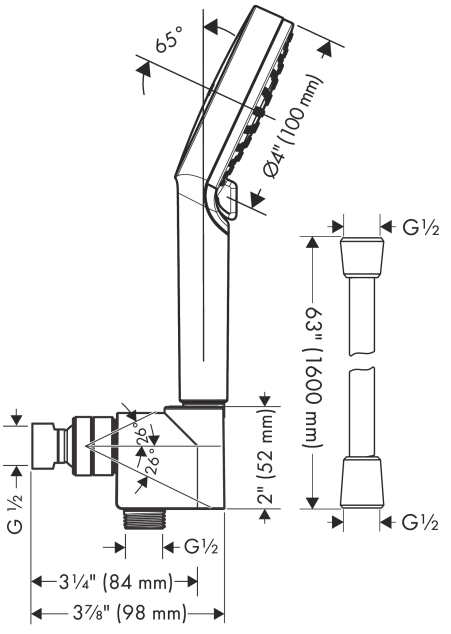
Scale drawing